TECHNOLOGY FOR A BETTER WORLD

WWW.KAIA.TECH

Complicated Experiment

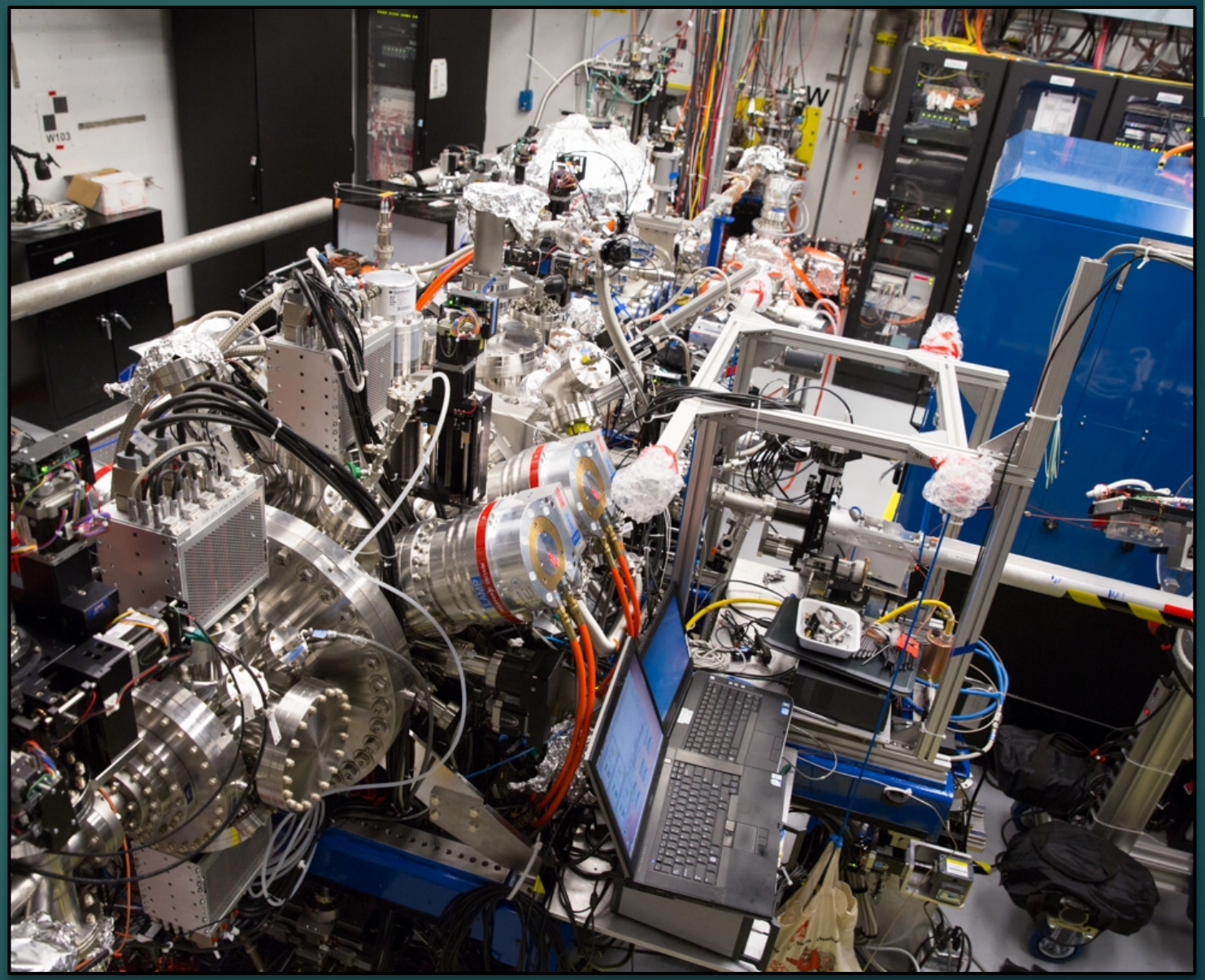

We can help!

Customers:

GOVERNMENTS

RESEARCH INSTITUTES AND UNIVERSITIES

RESEARCH AND DEVELOPEMENT COMPANIES

INDUSTRY

Design Process

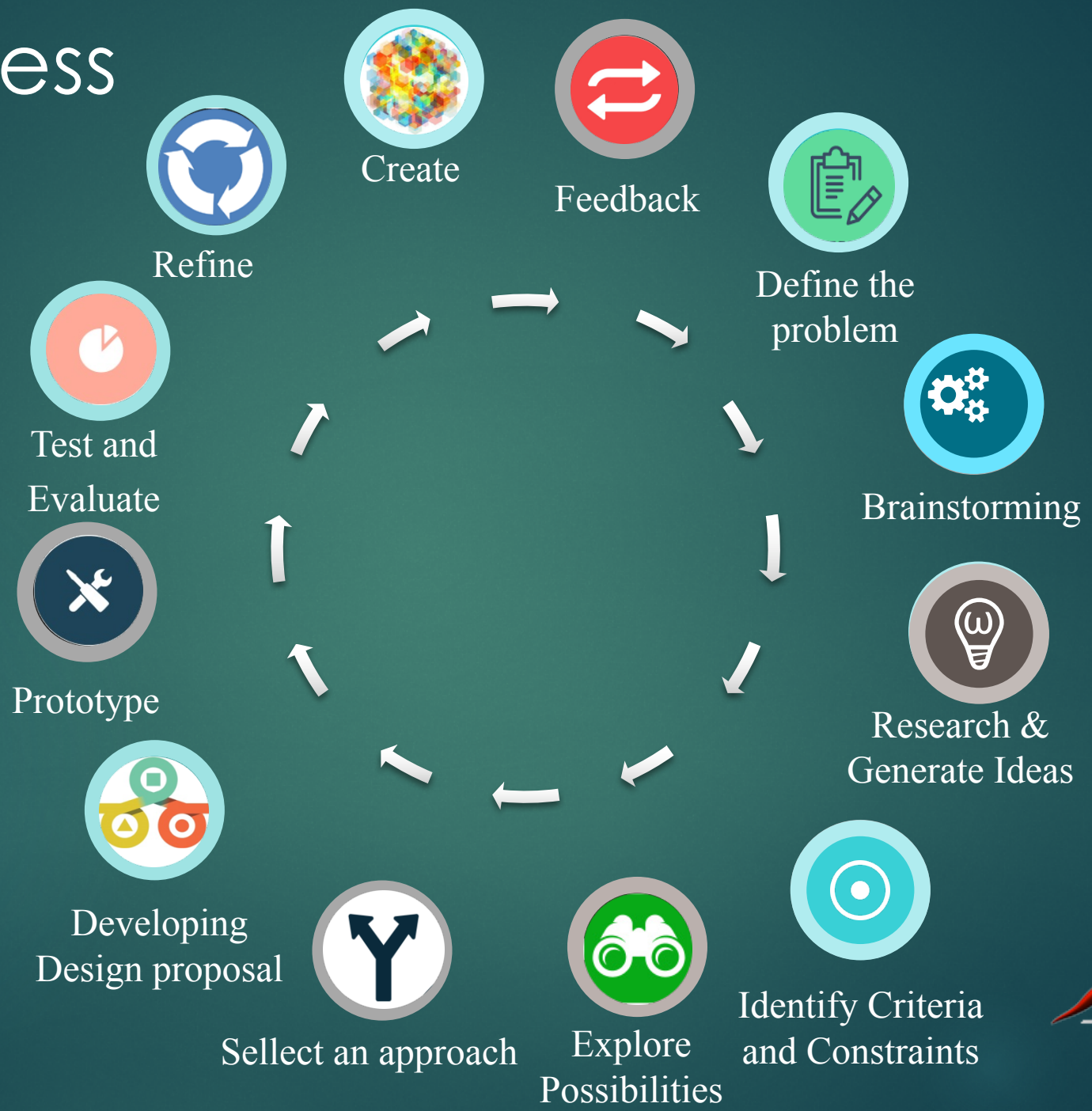

Non-Intrusive Pressure Measurements in Nano Cracks

KAIA CORP

UREP Project

“Phase Behavior in Nanopores”

Elham Parsa Ph.D.
Colorado School of Mines

Our Approach:

Non-Intrusive Pressure Measurement via Laser Interferometry

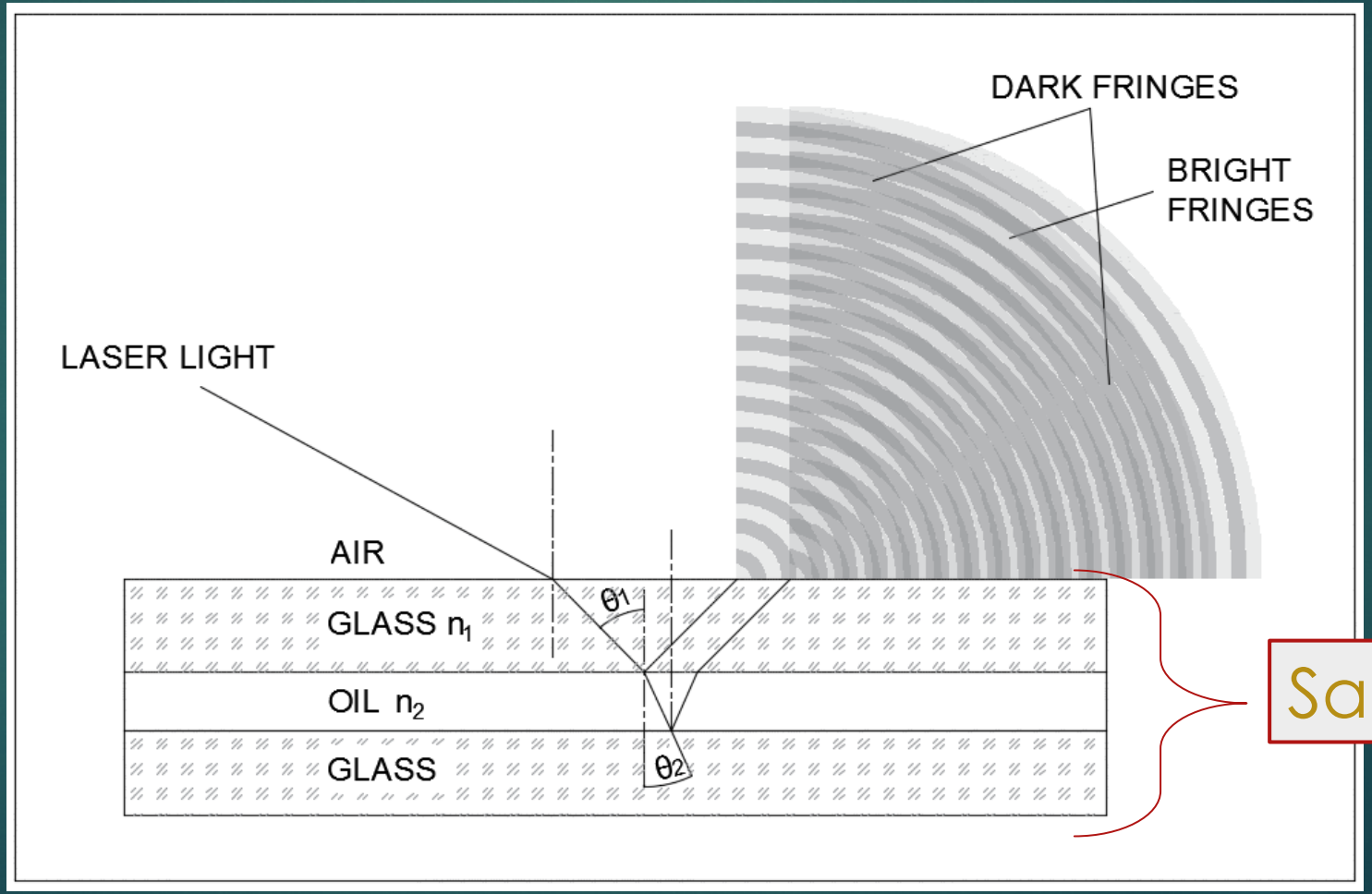

Sample

Our Approach:

Non-Intrusive Pressure Measurement via Laser Interferometry

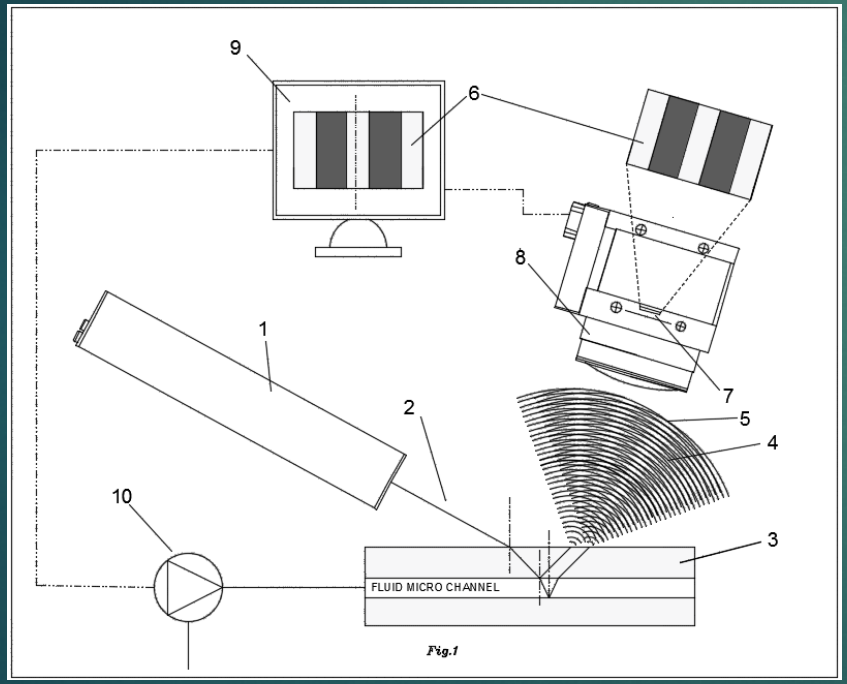

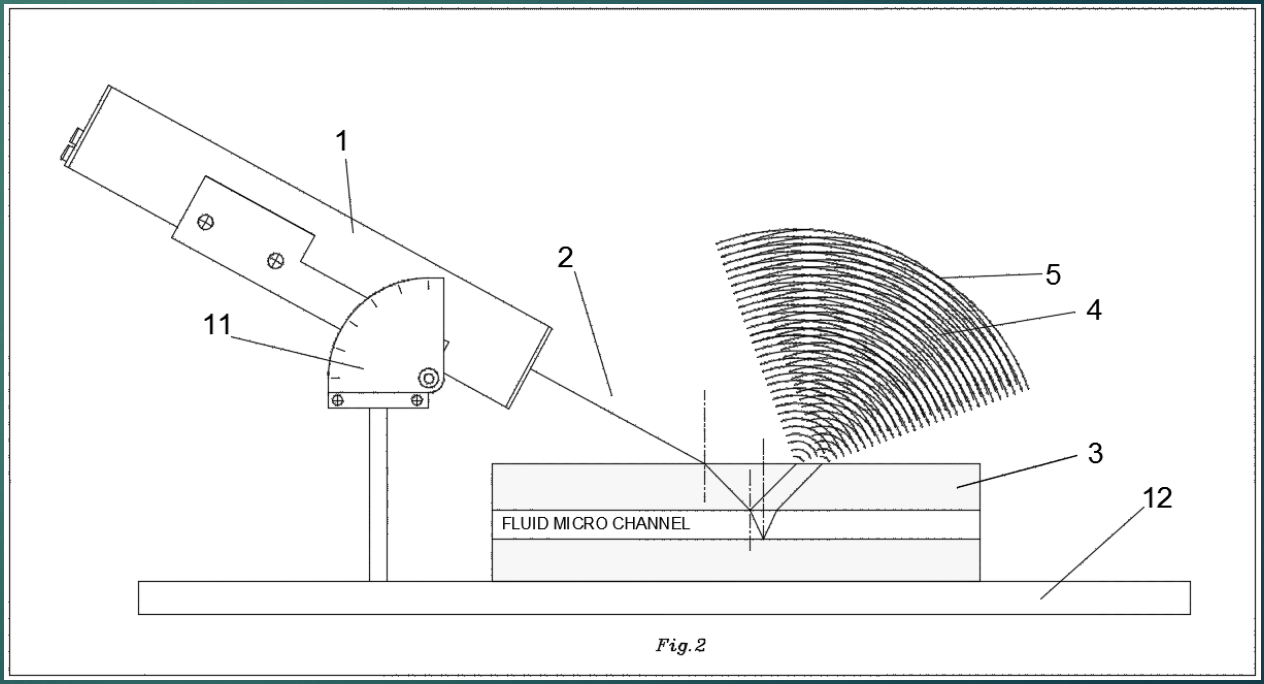

Our Approach

PREO: Measuring Pressure in Micro Cracks Using Optics*

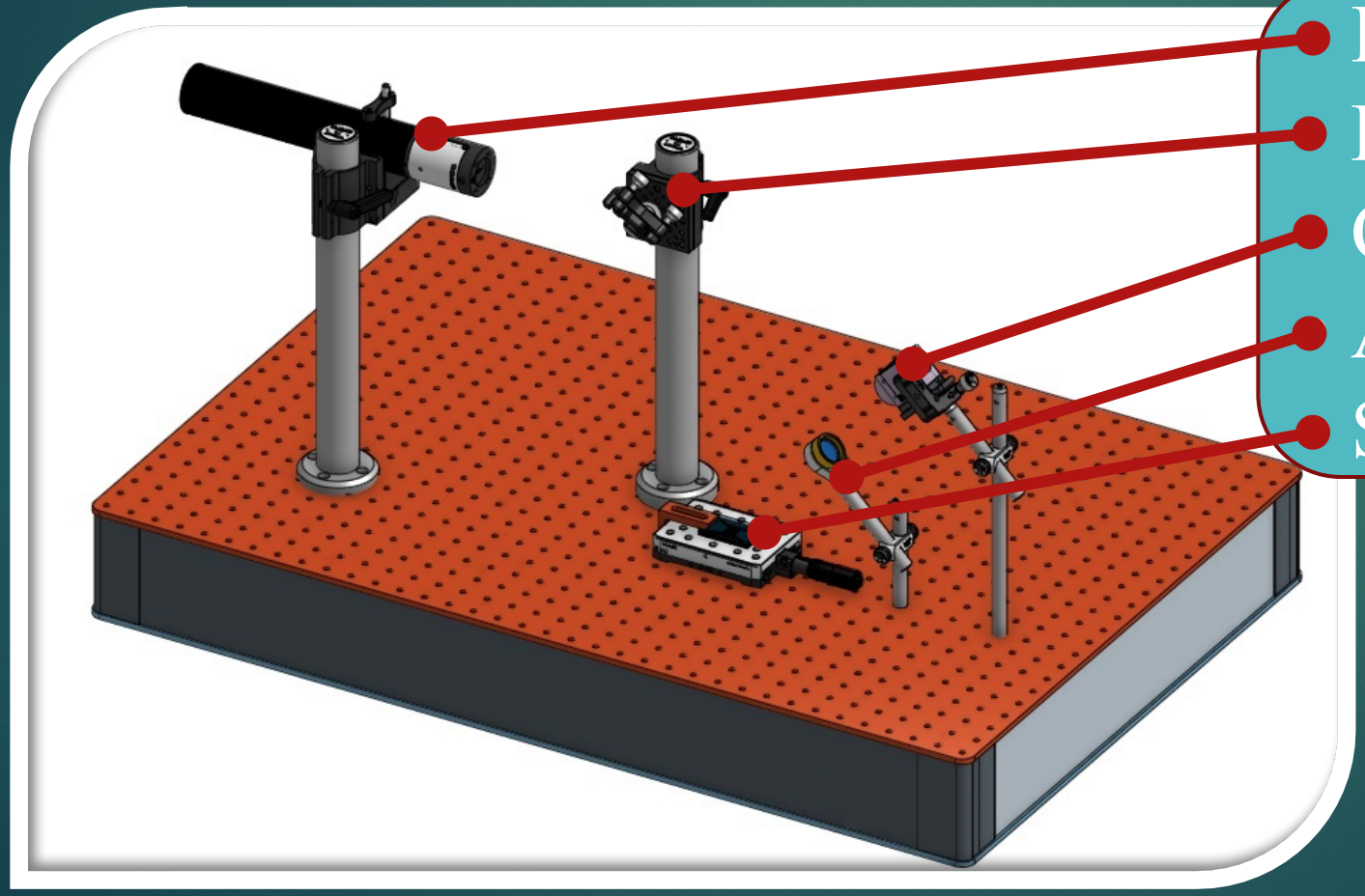

- LASER
- Reflective Mirror
- Camera
- Aperture
- Sample

**Patent Pending*

Our Approach

PREO

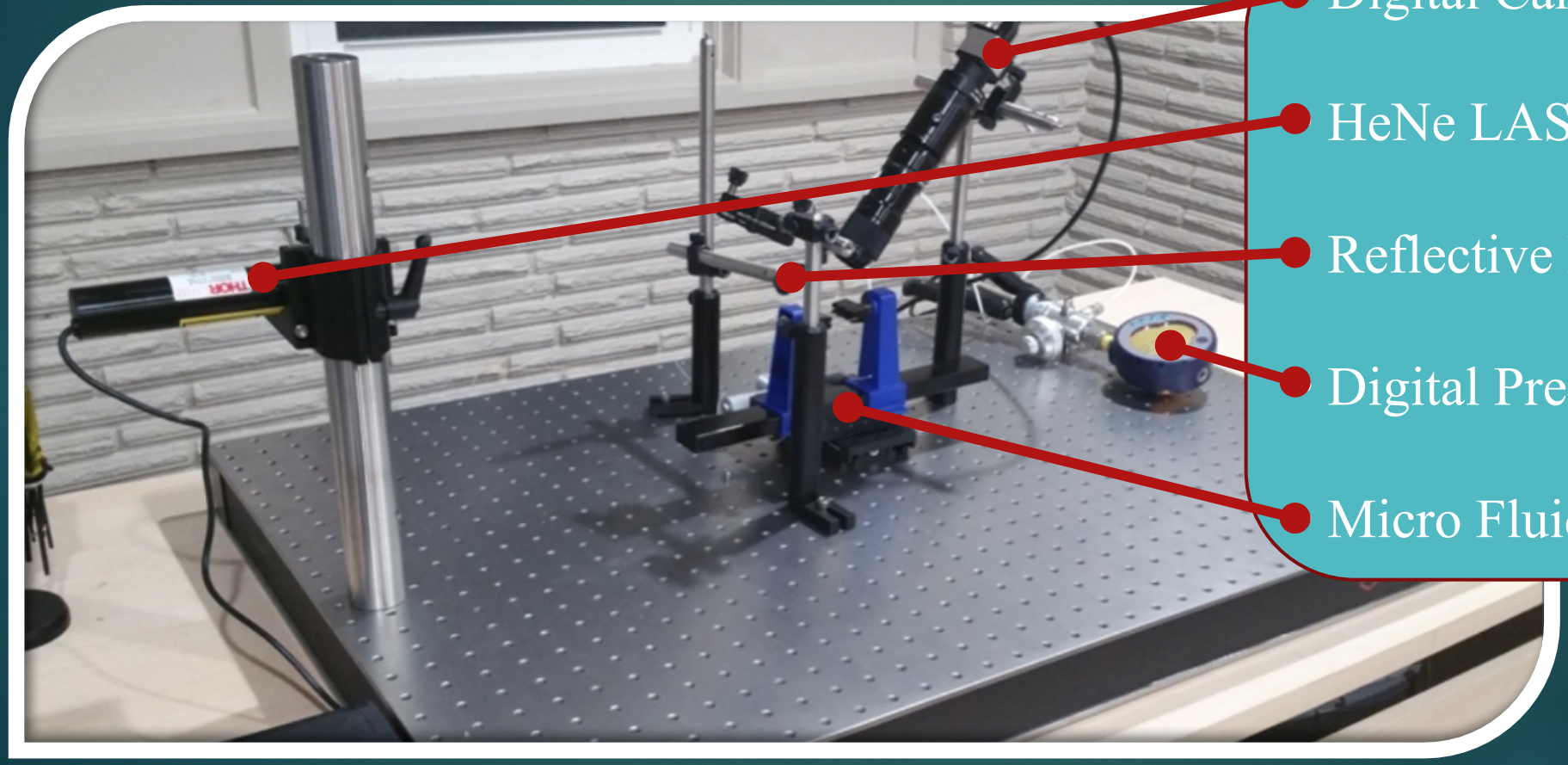

- Digital Camera
- HeNe LASER (632.8 nm)
- Reflective Mirror
- Digital Pressure Indicator
- Micro Fluidic Chip

Our Approach

PREO: Top View

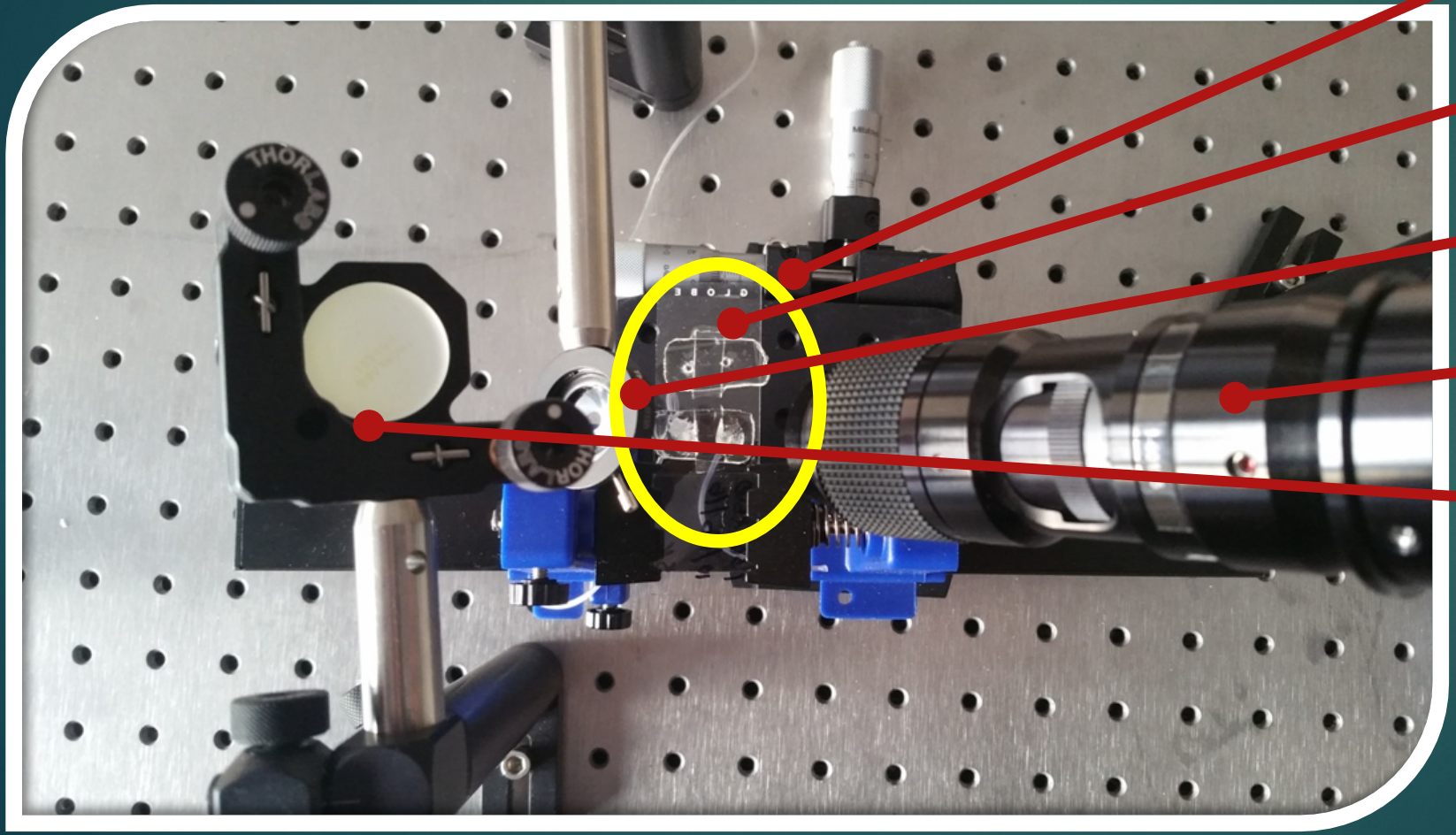

Solution: Sample and Camera Image

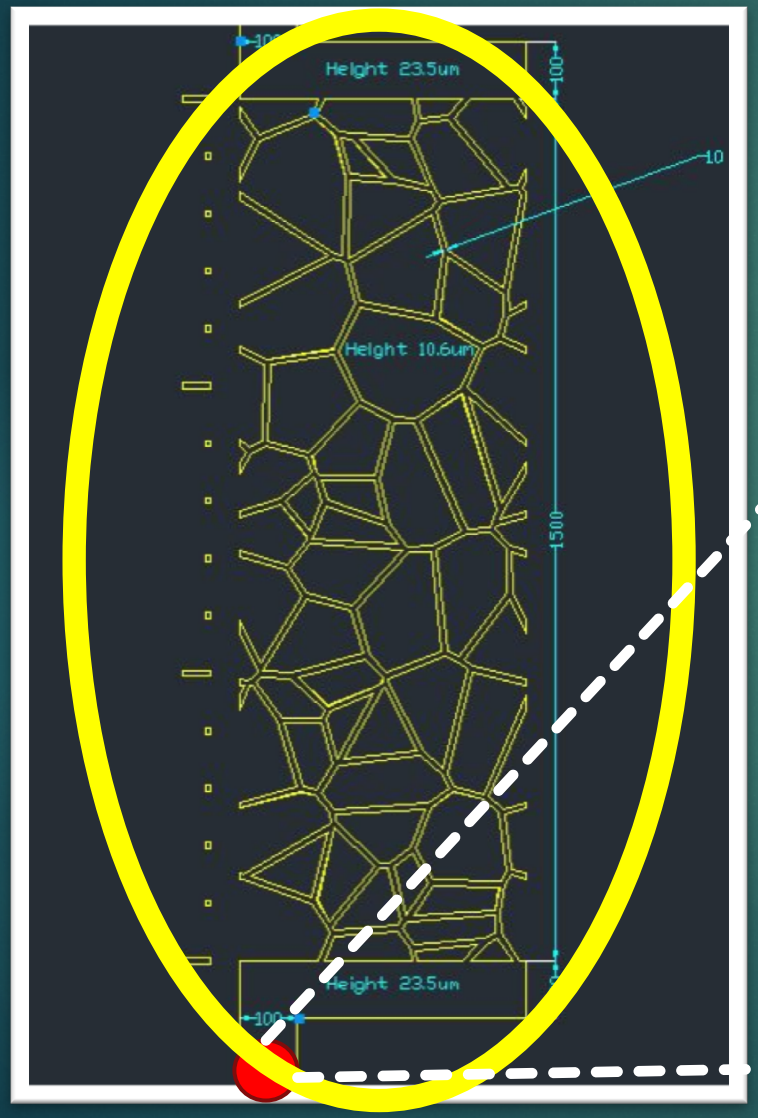

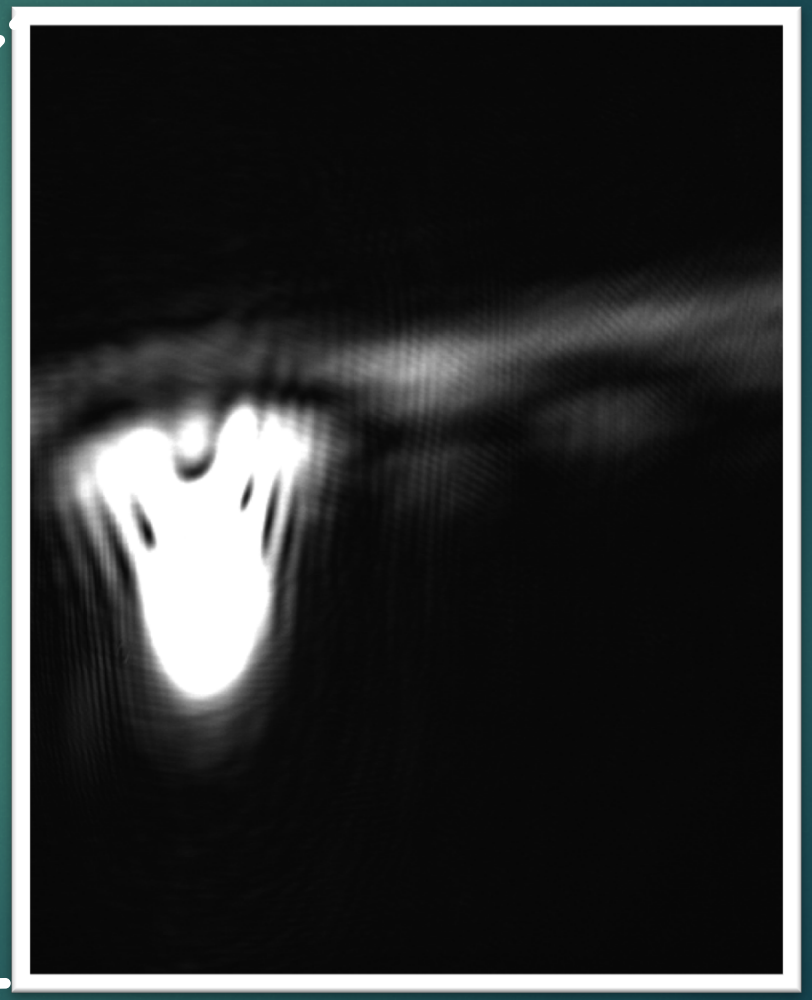

Data

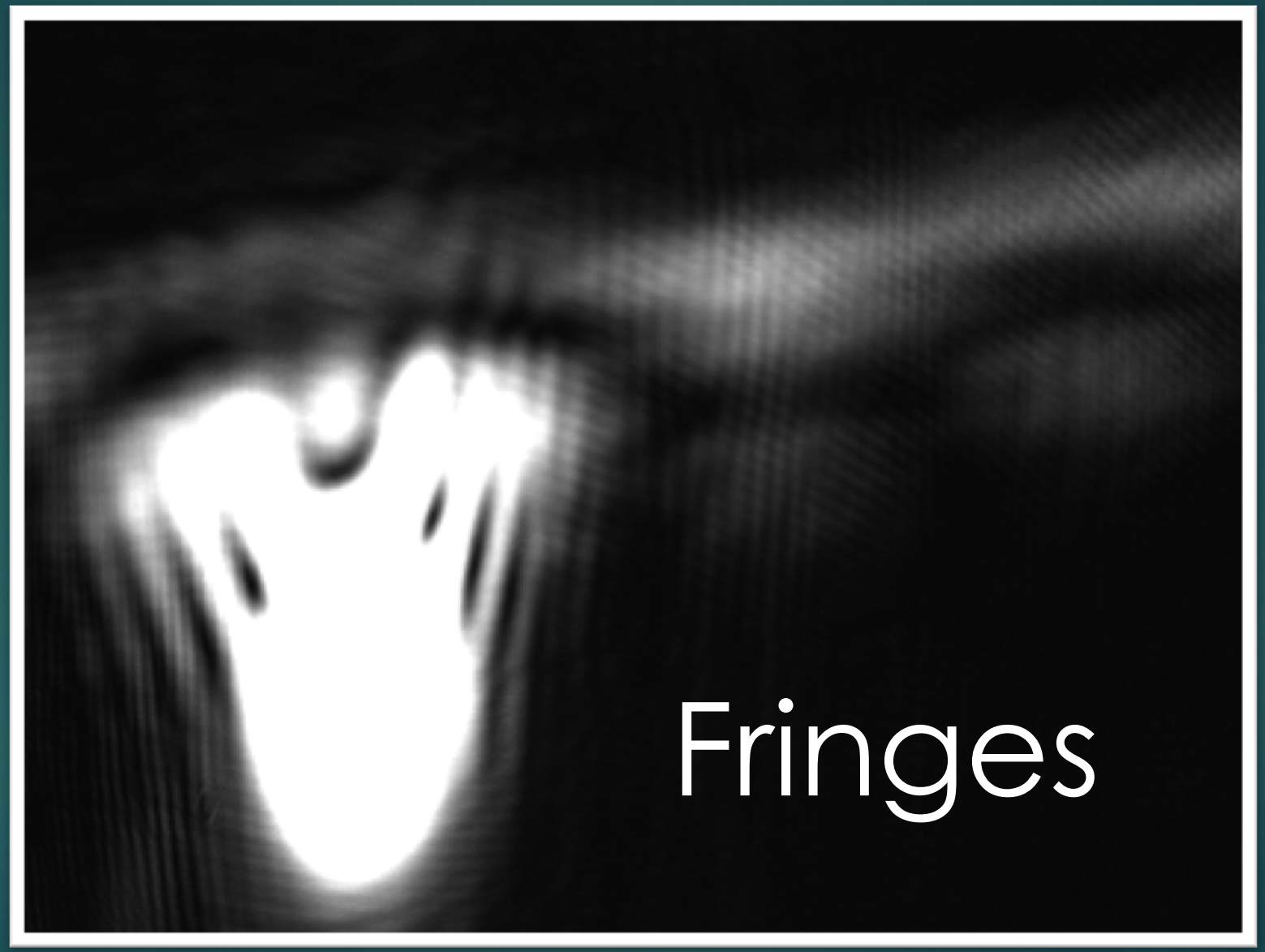

“Dancing” Fringes

Optic Flow - Displacement per Frame

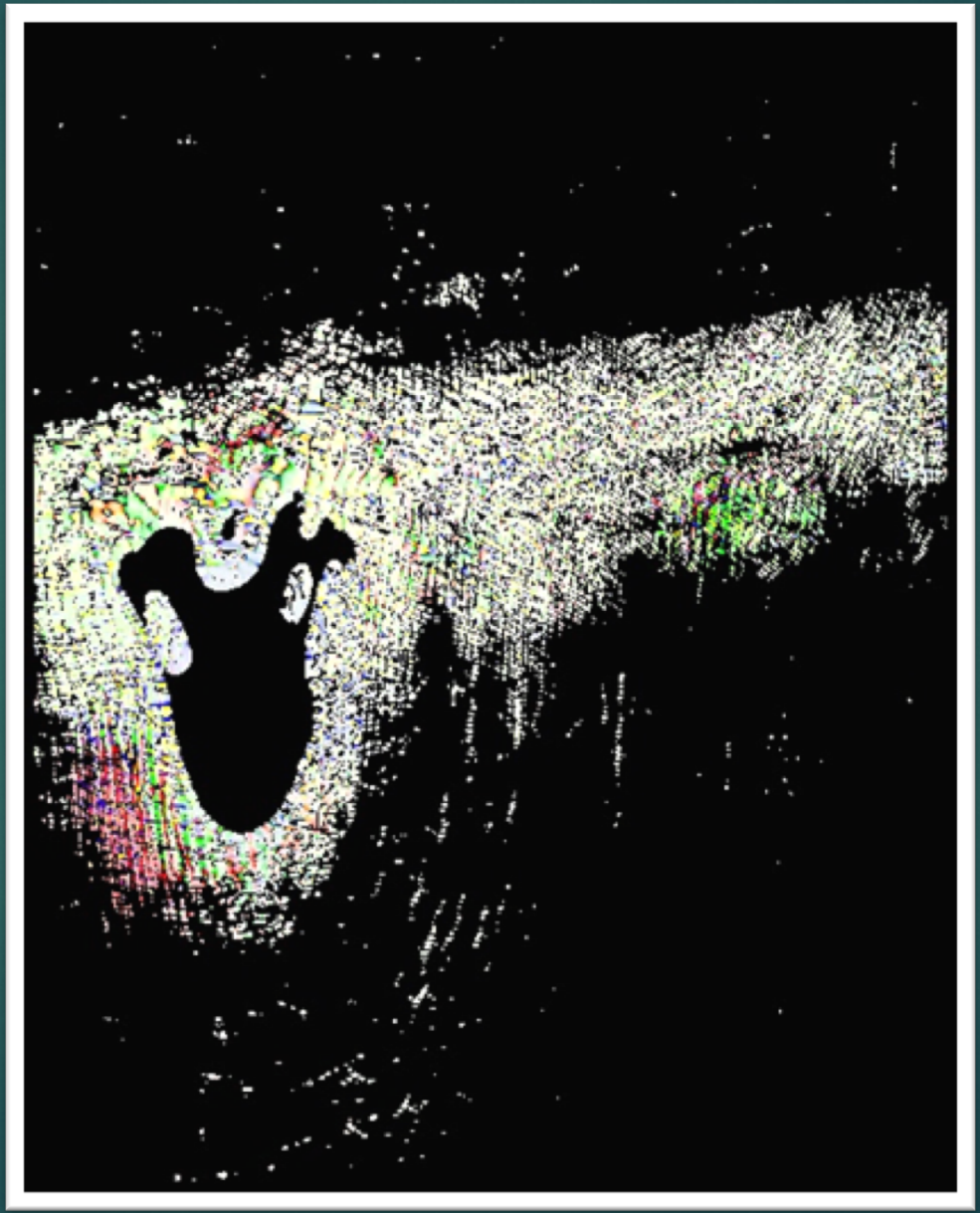

Fringe Width Calculation

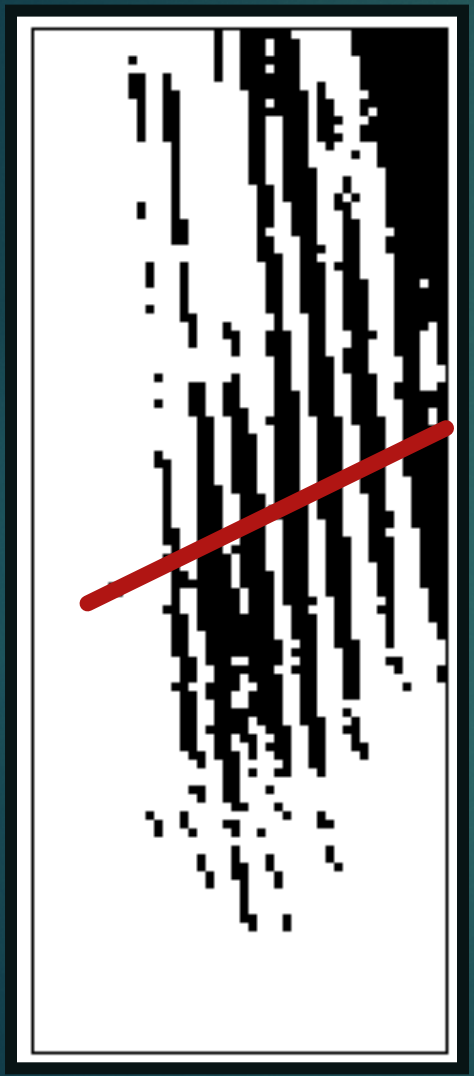

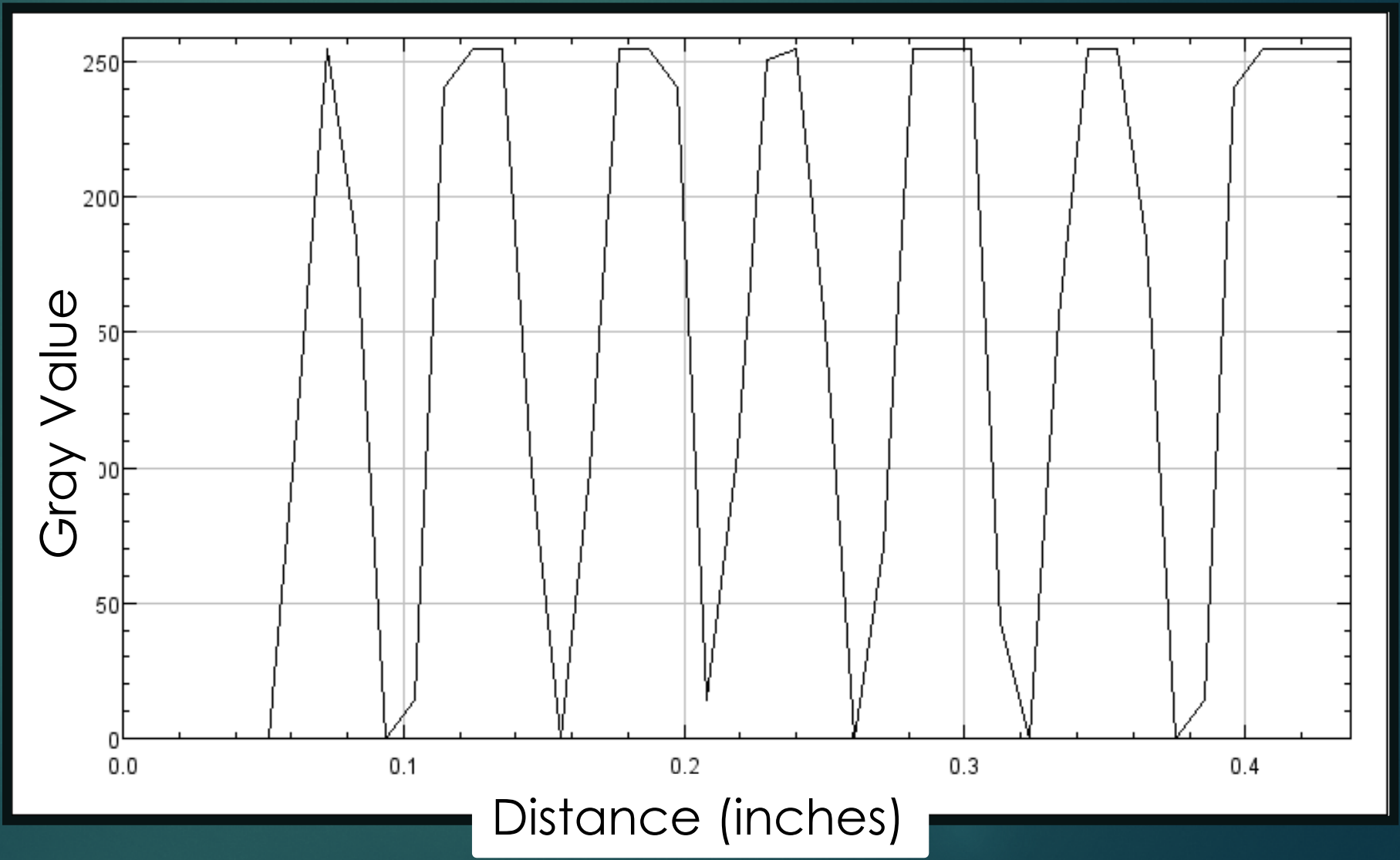

Results:

- Measured (Pressure Indicator):

10 psi

- Calculated (from the Fringe Shift):

9.9 psi

Errors Sources:

- Vibrations
- External light
- Manual pressure control
- Material deflection
- Manual readings and measurements of pressure and impingement angle
- Non-uniform channels
- Humidity
- Visualization delays and manual shots

Future Improvements:

- Vibration damping table
- Light enclosure
- Automate Pressure Measurements
- Automate Impingement Angle Measurements
- Single Channeled Chip (Calibration)
- Include Hygrometer (Relative Humidity)
- Re-Design Optical Train (Optimize)
- Increase Pressure and Temperature Operating Ranges

Thank You

www.Kaia.tech